LUNOS e²

Decentralized ventilation system with built-in regenerative heat recovery core

Dimensions	
Diameter unit	5-7/8″ – 150mm
Exterior diameter tube	6-3/8″ – 163mm
Minimum wall thickness	12″ – 300 mm
Installation tube (can be cut)	12′ to 19.5″ - 300 to 500 mm Optional 27″-700mm tube
Inside cover	7-1/16″ x 7-1/16″ – 180 x 180 mm
Outside grill diameter	7-1/16″ – 180

Operating and wired in groups of 2 or 4, these fans provide continuous ventilation without the need for ductwork - installed directly in the exterior wall. The regenerative core is charged every 70 seconds, after which the fan reverses and the incoming air absorbs the stored heat on its way in.

Technical Specs	
Heat recovery efficiency (DiBT)	90.6%
Humidity recovery	20-30%
Flow rates (see also install. Manual)	17/25/34 m³/hr or 15/30/38 m³/hr 10/15/20 CFM or 9/18/22 CFM
Operating sound levels	16.5 dB at 15 m³/hr (9CFM) 19dB at 30 m³/hr (18CFM) 26dB at 38 m³/hr (22CFM)
Power consumption Fan <0.1amp	1.4 W (17 m³/hr) 2.8 W (34 m³/hr
Fan efficiency- ventilation eff.	0.09 Wh/m³ - 0.41 Wh/m3
Filter	G3 or Pollen (F5)

ng Supply
, NY 11231
info@foursevenfive.com
718-622-1600
FOURSEVENFIVE.COM

Dimensions (mm and inches)

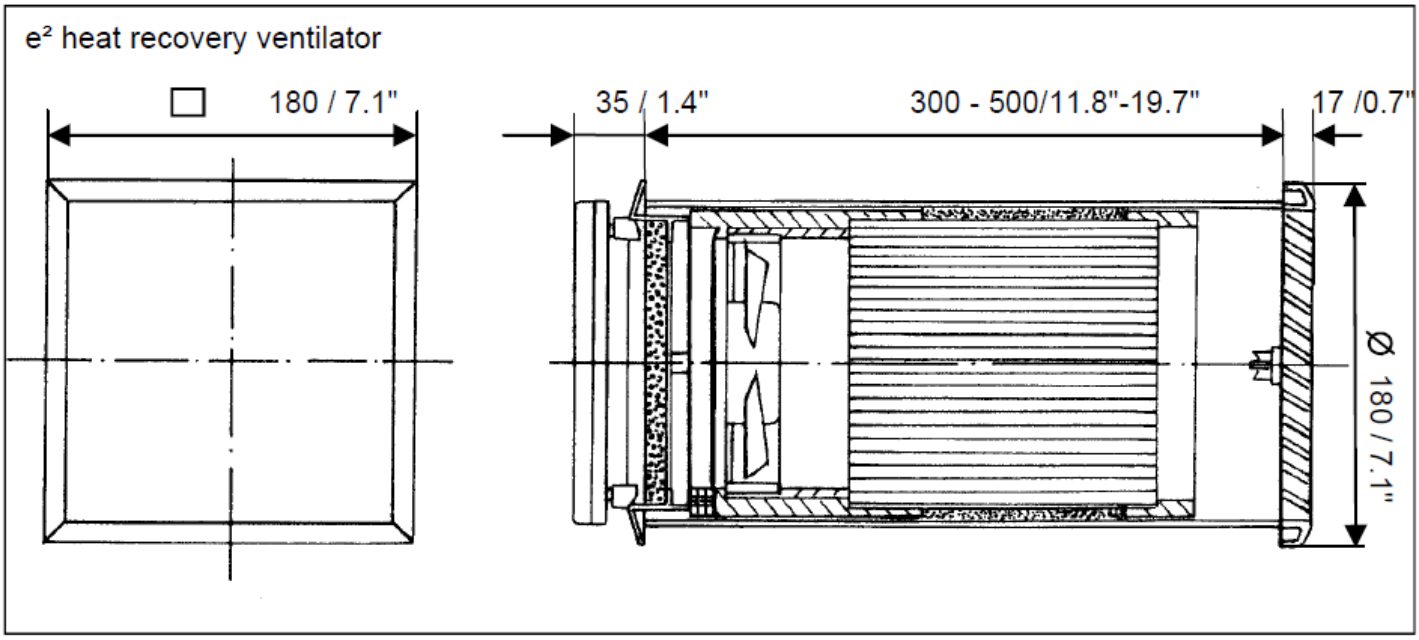

Basic fans assembly includes:
Ceramic regenerative heat exchange core
EPP- insulation rings
12V – reversing fan, with G3 Filter
Switch for up to four e²'s,
a 110V-12V electronic transformer
Installation Tube
White Interior cover
White Exterior grill, with insect screen

Accessories:
Exterior noise attenuator 9/SW
Washable replacement filters (3 pack), G3 9/FIB-3R
Pollenfilter F5 (3 pack) – 9/FIB-P
Grey and red-brown exterior grills (1/GE180 and 1/RE180)
Touch screen controls

see www.lunos.de for more info

475 High Performance Building Supply
131 Union St. Brooklyn, NY 11231
info@foursevenfive.com
718-622-1600
FOURSEVENFIVE.COM