Installation Manual
Duct-less Ventilation System with Heat Recovery
Type e² and e² short

Contents **Page:**

About this manual, safety instructions	1
Technical Specifications	1
Dimensional diagrams	2
Installation location	2
Shipping units	3
Assembly: Assembly pipe and outside grid	4
Assembly: Electric installation and electric connection	5
Assembly: Heat recovery unit and indoor blind	6
Assembly: Noise absorption set	7
Flow rate selection/options on controller	7
Filter replacement, Cleaning	8
Additional replacement parts	8

About this manual

- Read this manual carefully and completely before assembly. Comply with the general safety instructions and the safety symbols with information in the text.
- Hand out this manual to the user (tenant, proprietors, property management etc.) after completing assembly.

Symbols in this manual

This symbol is a danger warning in connection with risk of injury

This symbol is a danger warning in connection with risk of injury from electricity

Safety instructions

Beware! Any assembly work to the ventilation device may only be carried out after disconnecting all phases of supply currents! The ventilation device is fitted with protective insulation according to Protection Class II, the protection connection is superfluous!

Attention! The electric connection may only be made by authorised qualified electricians according to the local building codes.

Attention! This device may not be operated by children and persons (filter replacement/ cleaning) who are not able to operate the device safely due to their psychic, sensory or mental abilities or their inexperience or lack of knowledge. Children should be supervised to ensure that they do not play with the device.

Technical specifications

Device voltage:	12 VDC SELV
Type of protection:	IP 22
Volume flow:	10;15;20 CFM or (9CFM-15m³/h;18CFM-30m³/h,22CFM-38m³/h)
Measuring sound pressure level	16,5 dB; 19,5 dB
Sound level difference:	42 dB

Disposal

Dispose of the packaging correctly sorted. If you want to dispose of the device, abide by the current rules and regulations. The applicable municipal office will provide information.

Dimensional diagrams (all dimensions in mm)

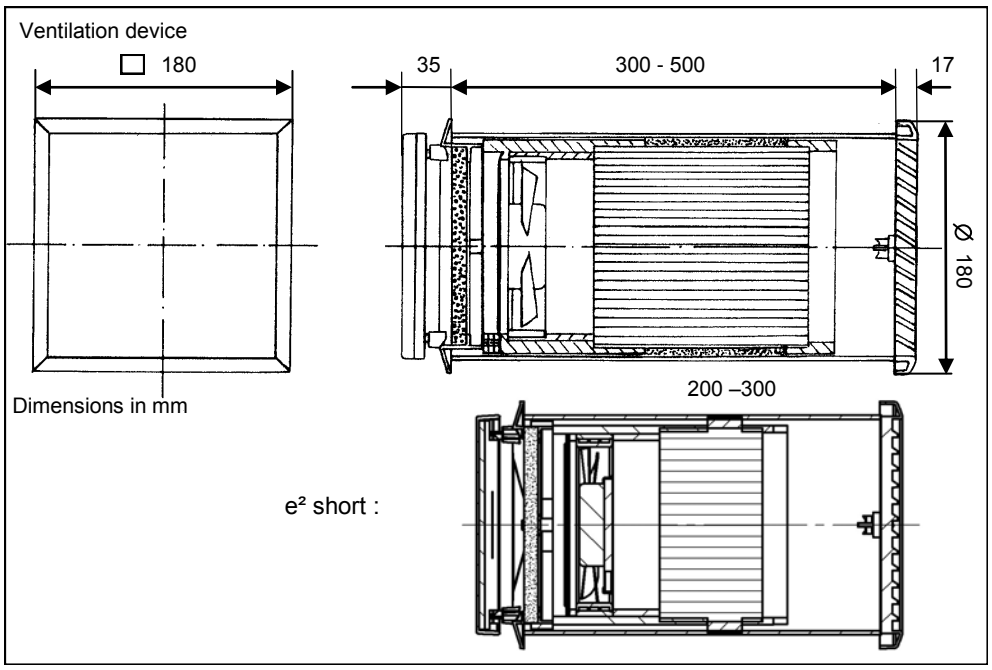

Installation position

Ductless e² ventilation devices with heat recovery can only function in pairs operating in opposite direction. Each fan operates 70 s (50s for e² short) in supply air operation, the other 70 s (50s for e² short) in exhaust air operation at the corresponding set flow rates. After which both air flows direction are changed. This assures that the total of the supplied ventilation volume is equal to the total exhausted volume.
If a pair of fans that in this balanced push-pull operation is installed in two different rooms of a dwelling, a sufficiently dimensioned interconnection (under cut door, etc) between the rooms should be installed to allow unrestricted air movement between these spaces.

Recommended minimum spacing when installing a pair of devices in a wall:

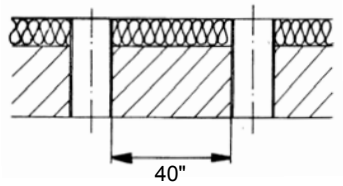

Recommended minimum spacing when installing a pair of devices across a corner:

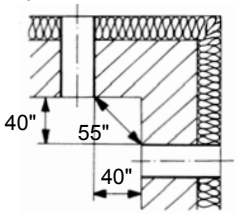

Operating conditions

Rated conditions: 5°F to +104°F (-15°C to +40°C) with relative humidity up to 65%.
During heating period it is possible for very small amounts of condensate to form on grilles in such conditions arise. If these limitation of use are exceeded for extended periods of time, the device can be closed with the indoor cover. Do ensure IAQ is maintained in such cases.

Shipping units

Check the shipment for completeness and note any missing items are damages asap.

Installation pipe (min 2x, max 4x)

Type 9/R 160 Order No.: 36 765

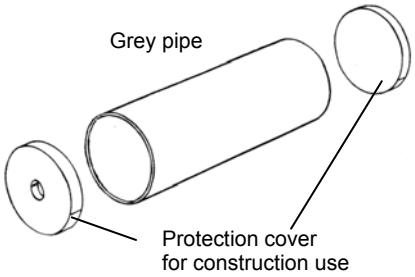

Outside grille (min 2x, max 4x)

Type 1/WE 180 white Order No.: 39 852
Type 1/GE 180 light grey Order No.: 39 853
Type 1/RE 180 red-brown Order No.: 39 854

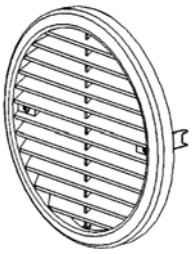

Heat exchanger unit – Indoor cover
(min 2x, max 4x)

Heat exchange unit

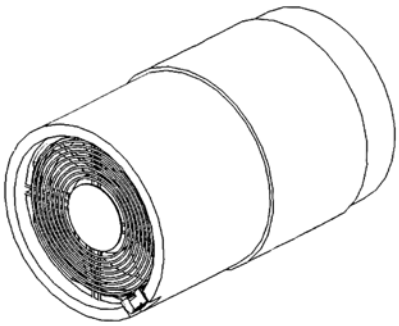

Indoor cover

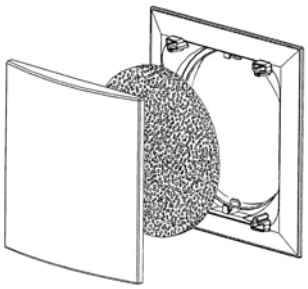

e²:
Installation pipe, exterior white grille, heat exchange unit, indoor cover and installation instructions are supplied as a complete set.

e² short:
Installation pipe, exterior white grille, heat exchanger unit, indoor cover and installation instructions are supplied as a complete set.

Assembly – Installation pipes

Make the wall openings for the assembly pipes (e.g. by coring, core bit Ø 6.37"/162 mm).
If necessary shorten the pipe to the desired installation length (e²: min. 11.8"/300 mm; e²short: min.8"/200).
Take care that the pipe extends on both sides for finsihes (sheetrock, plaster, siding (with finishes installed flush with the pipe).

Insert the pipe and airseal it with ROFLEX gaskets, TESCON tapes or other airtight solutions.

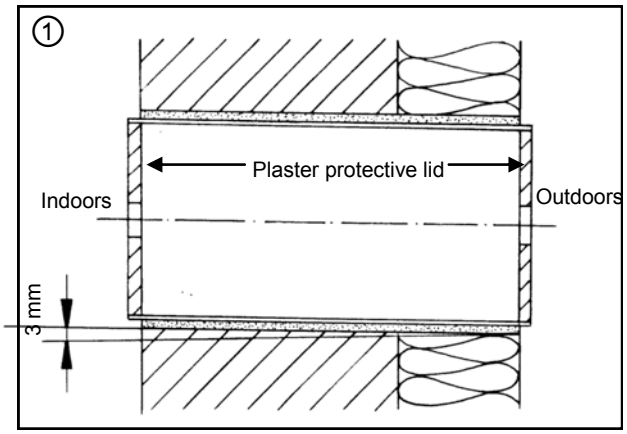

Apply exterior finishes and waterproofing with ROLFEX/TESCON tape combination or other construction type specific measures.

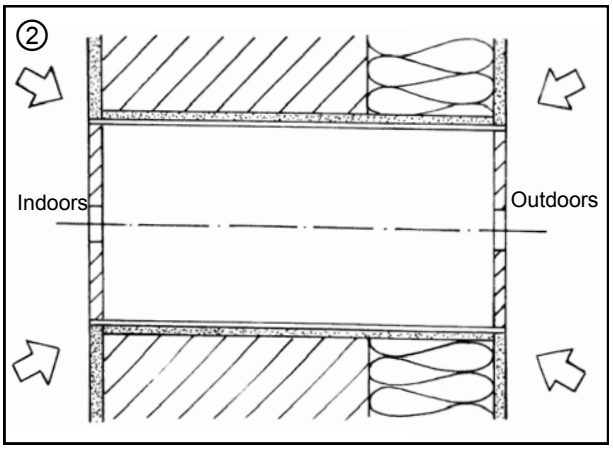

Remove the construction protection lid outdoors. Insert and attach the exterior grille using the integrated claw fasteners (tighten screws).

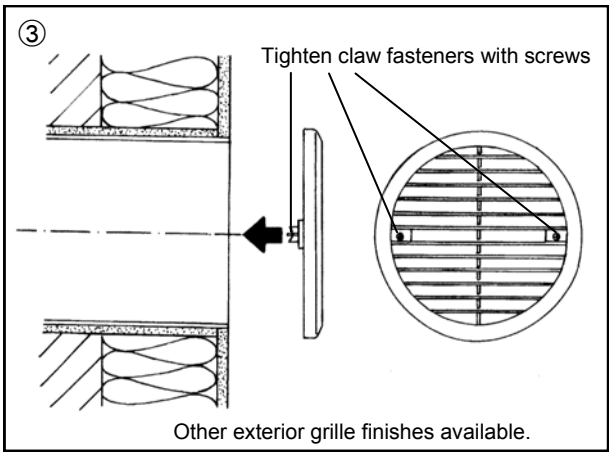

Assembly – electric installation and electric connection

Safety instructions:

Beware! Any assembly work to the ventilation device may only be carried out when all of supply current has been disconnected!

Make sure that electrical circuits are turned off

All controllers of this ventilation system should installed on a GFCI protected circuit

Electric connection only by a licensed electrician

The system is controled by Universal Control 5/UNI or Touch Air Comfort TAC (see seperate installation instructions).
Select the location for the switch.
Run the wiring (120V + 12V cables to the device pairs).
120V cable (12 or 14 ga.)
12V to each fan (3 x 18 ga. solid).

Controller is wired and set per diagram below.

④

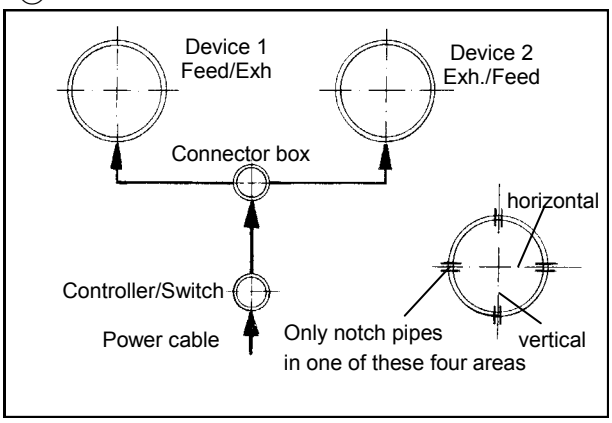

⑤

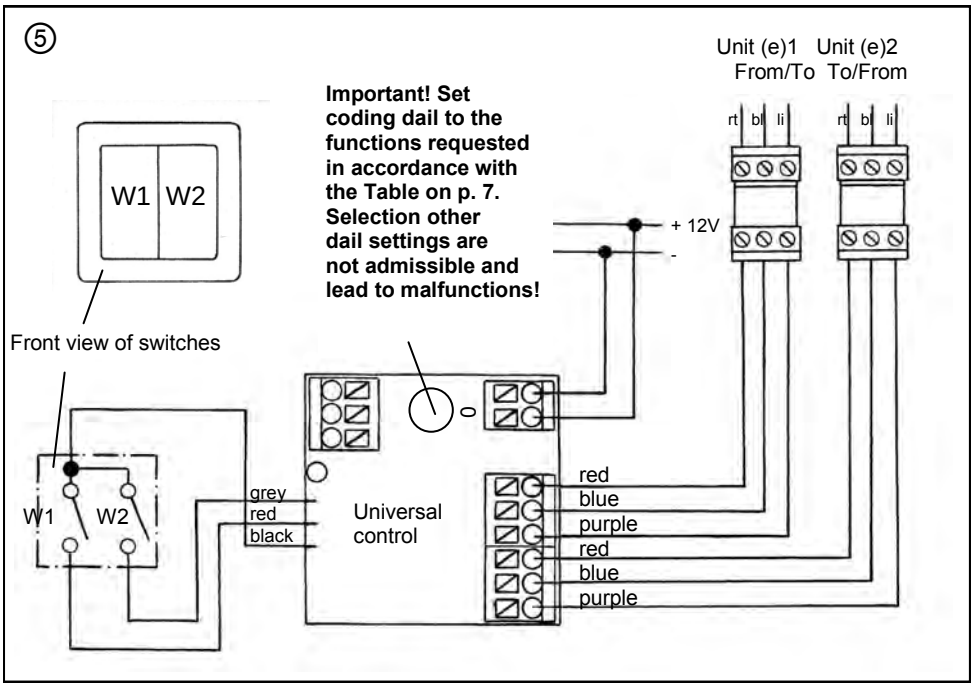

Assembly – Assembly of the ventilation insert and the indoor room cover

Remove interior protection lid cover, insert heat exchanger unit into the installation pipe, ensure there is a 7/8" on int of pipe. Motor/fan faces inside.
The loop on fan unit can be used to pulled unit for maintenance.

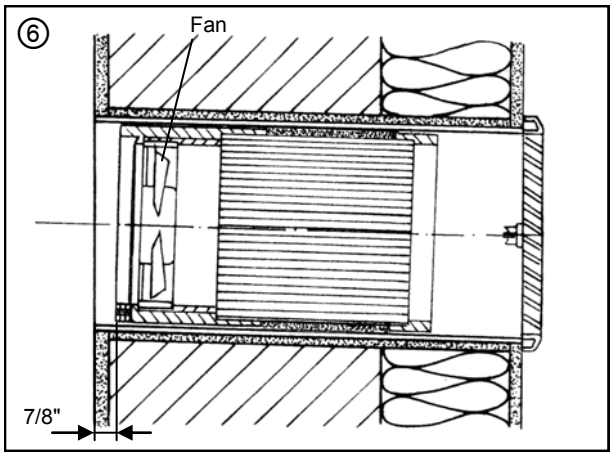

Connect wiring to plug. Connect plug into socket and set them into the recess of the heat exchanger casing.

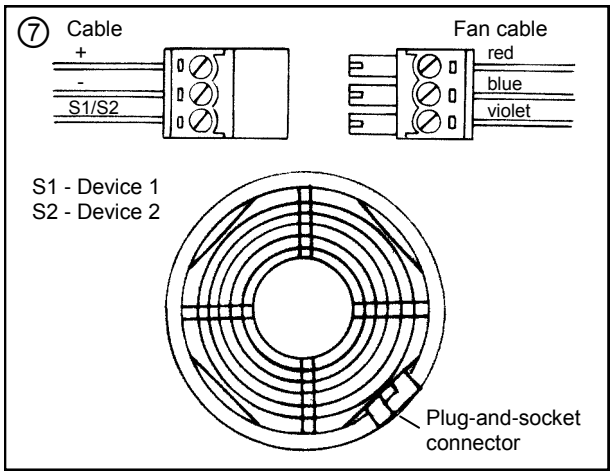

Insert indoor cover with filter casing, snap the indoor blind into place in open position (1/4" off wall)

If cover completely covered, lift cover and rotated 180 degrees.

Installation is now complete.

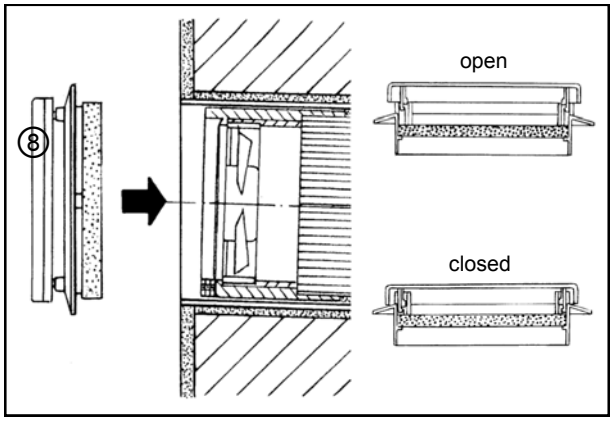

Assembly noise absorption set

Can be used in a installation pipe length of 12" for e² and 9" for e² short. Position noise absorption ring and noise absorption layer as shown. The noise absorption layer can be shortened if necessary.

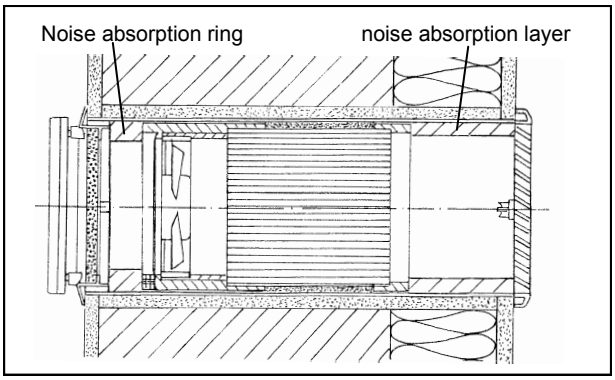

Selections on controller for flow regulation program

Setting at controller	Device	Function	Program and ventilation volume				Switching W2 within 3 seconds activates
			W 1 - Off	W 1 - On	W 1 - Off	W 1 - On	
			W 2 - Off	W 2 - Off	W 2 - On	W 2 - On	
0	RA 15-60	Off, three flow rates	Off	15 m³/h	30 m³/h	45 m³/h	60 m³/h
1	RA 15-60	Off, three flow rates	Off	15 m³/h	30 m³/h	60 m³/h	
2	RA 15-60	vierstufig	15 m³/h	30 m³/h	45 m³/h	60 m³/h	
3	e²	Off, three flow rates	Off	15 m³/h	30 m³/h	38 m³/h	
4	e²	four flow rates	15 m³/h	20 m³/h	30 m³/h	38 m³/h	Summer vent.
5	e² short	Off, three flowrates	Off	15 m³/h	30 m³/h	38 m³/h	Summer vent.
6	e² USA	Off, three flow rates	Off	10 cfm	15 cfm	20 cfm	Summer vent.
7	e² USA short	Off, three flow rates	Off	10 cfm	15 cfm	20 cfm	Summer vent.
8	e² mini	Off, three flow rates	Off	5 m³/h	10 m³/h	20 m³/h	Summer vent.
9	e⁹⁰	Off, three flow rates	Off	5m³/h	10 m³/h	20 m³/h	Summer vent.
A	e⁹⁰	vierstufig	5 m³/h	10 m³/h	15 m³/h	20 m³/h	Summer vent.
B	e⁹⁰	three flows rates and exhaust only	5 m³/h	10 m³/h	20 m³/h	45 m³/h (Exhaust)	Summer vent.
C	e⁹⁰	Off, two flow rates and exhaust only	Off	5 m³/h	10 m³/h	45 m³/h (Exhaust)	Summer vent.
D							
E							
F							

By flipping W1 switch back and forth within 3 seconds, the filter warning light will reset (turn off)
***Summer/night ventilation means fans reverse 1x per hour - to facilitate night time cooling**

Filter replacement

LED light will light when filter needs servicing. To reset follow instructions on page 7.

:
Put the indoor closure off, extract the filter, insert new or cleaned filter (the filter cleaning could be done in for example a dishwasher), put the indoor clo-cover back on.

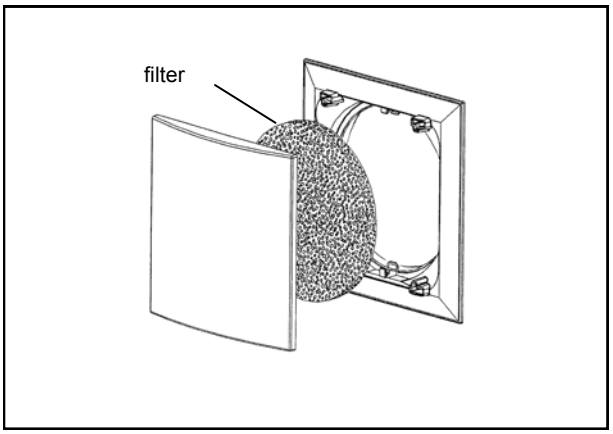

Please note the filter replacement below:

Filter replacement date	Expected filter replacement	Type of filter used

Cleaning

If necessary wipe the indoor cover and frame with a dry soft cloth.

⚠ Filter replacement and cleaning may neither be carried out by children nor by persons who are not able to operate the device safely due to their psychic, sensory or mental abilities or their inexperience or lack of knowledge.

Additional / replacement parts

Indoor blind compl. 9/IBE	Order No.: 39 851
Replacement filter G3, 9/FIB3R, pack of 3	Order No.: 37 214
Noise absorption set 9/SW	Order No.: 39 850
Wind pressure fuse 9/WDSE (for assembly pipe from 370 mm length)	Order No.: 39 860
Acustic insulated frame 9/IBS	Order No.: 39 947

Germany
LUNOS Lüftungstechnik
GmbH für Raumluftsysteme
Wilhelmstr. 31
13593 Berlin

Tel.: 0 30 / 36 20 01 - 0
Fax: 0 30 / 36 20 01 - 89
E-Mail: info@lunos.de
Internet: http://www.lunos.de

E132 10/13