WhisperGreen® VENTILATION FAN

FV-08VKS3

Specification Submittal Data / Panasonic Ventilation Fan

Description

Ventilating fan shall be Low Noise ceiling mount type rated for continuous run. Fan shall be ENERGY STAR® rated and certified by the Home Ventilating Institute (HVI). Evaluated by Underwriters Laboratories and conform to both UL and cUL safety standards.

Motor/Blower:

- Totally enclosed DC brushless motor technology, currently more energy efficient than the minimum ENERGY STAR requirements, rated for continuous run.
- Power Rating shall be 120 volts and 60 Hz.
- Fan shall be UL listed for tub/shower enclosure when used with a GFCI branch circuit wiring.
- Motor equipped with thermistor high limit control.
- Removable with permanently lubricated plug–in motor.

Housing:

- Rust proof paint, galvanized steel body.
- Detachable dual 4" or 6" diameter duct adaptor.
- Built-in backdraft damper.
- Expandable extension bracket up to 24".
- Double hanger bar system allowing for ideal positioning.

Grille:

- Attractive design using PP material.
- Attaches directly to housing with torsion springs.

Warranty:

- ALL Parts: For period of 3 years from the date of the original purchase. DC Motor: For period of 6 years from the date of the original purchase.

Architectural Specifications:

Ventilation fan shall be of the ceiling mount, ENERGY STAR rated type, with variable speed control that shall be built-in with a high/low delay timer and activated by a switch, with no less than 80 CFM and no more than <0.3 sone as certified by the Home Ventilating Institute (HVI) at 0.1 static pressure in inches water gauge (w.g.) with no less than 79 CFM and no more than 0.4 sone as certified by HVI at .25 w.g. Power consumption shall be no greater than 7.0 watts at 0.1 w.g. and 11.0 watts at 0.25 w.g. ENERGY STAR rated with efficiency of no less than 12.1 CFM/watt at 0.1 w.g. and 7.6 watts at 0.25 w.g. The motor shall be enclosed with brushless DC motor engineered to run continuously. Power rating shall be 120v/60Hz. Included is a detachable dual 4" or 6" diameter duct adaptor. Duct diameter shall be no less than 4". Fan shall be UL and cUL listed for tub/shower enclosure when used with GFCI branch circuit wiring. Fan shall be ASHRAE 62.2, LEED, ENERGY STAR IAP, EarthCraft, California Title-24, WA Ventilation Code compliant.

DC Motor Technology:

- Allows the fan to run continuously at a pre-set lower level (0, 30 – 70 CFM). The fan then elevates to a maximum level of operation (80 CFM) when motion sensor is activated.
- When fan faces static pressure, its speed is automatically increased to ensure that the desired CFM is not compromised, which allows the fan to perform as rated.

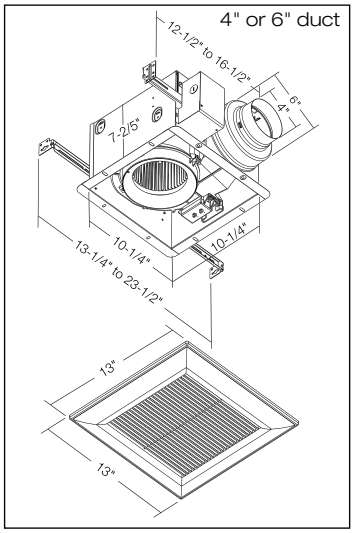

FV-08VKS3

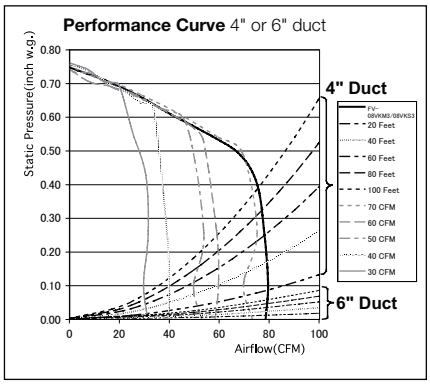

Specifications: **WhisperGreen** FV-08VKS3 — **4" or 6" Duct (Standard)**												
Static Pressure in inches w.g.	0.1	0.25	0.1	0.25	0.1	0.25	0.1	0.25	0.1	0.25	0.1	0.25
Air Volume (CFM)	80	79	70	75	60	59	50	54	40	39	30	32
Noise (sones)	<0.3	0.4	<0.3	0.4	<0.3	0.3	<0.3	0.3	<0.3	<0.3	<0.3	<0.3
Power Consumption (watts)	7.0	11.0	5.4	10.1	5.0	8.7	4.3	7.5	3.7	6.6	3.2	5.8
Energy Efficiency (CFM/Watt)	12.1	7.6	13.3	7.7	13.6	7.7	12.4	7.7	12.8	7.1	11.4	6.7
Speed (RPM)	832	1130	791	1125	773	1106	749	1101	740	1093	745	1087
Current (amps)	0.02	0.01	0.03	0.01	0.05	0.01	0.05	0.02	0.05	0.03	0.06	0.04
Power Rating (V/Hz)	120/60											
ENERGY STAR®	Yes											

As of date 4/11

For complete Installation Instructions visit **www.panasonic.com/building**

Model	Quantity	Comments	Project:
			Location:
			Architect:
			Engineer:
			Contractor:
			Submitted by:
			Date:

Panasonic Home and Environment Company
Division of Panasonic Corporation of North America
One Panasonic Way / Secaucus, NJ 07094

www.panasonic.com/building

HVI CERTIFIED c UL us ENERGY STAR

Panasonic ideas for life